plastpro

5200 W. CENTURY BLVD.
LOS ANGELES, CA 90045

OPAQUE FIBERGLASS DOORS DOUBLES w/ or w/o SIDELITES

INSWING / OUTSWING "IMPACT"

L. F. SCHMIDT
LICENSE
No. 43409
STATE OF FLORIDA
PROFESSIONAL ENGINEER

This item has been digitally signed and sealed by **L. F. Schmidt, P.E.** on the date adjacent to the seal.

Printed copies of this document are not considered signed and sealed and the signature must be verified on any electronic copies.

THIS PRODUCT APPROVAL IS VALID ONLY FOR THE STATE OF FLORIDA

GENERAL NOTES

1. This product has been evaluated and is in compliance with the 9th Edition (2026) Florida Building Code (FBC) structural requirements excluding the "High Velocity Hurricane Zone" (HVHZ).

2. Product anchors shall be as listed and spaced as shown on details. Anchor embedment to base material shall be beyond wall dressing or stucco.

3. When used in areas requiring wind borne debris protection this product complies with Section 1609.1.2 of the FBC and does not require an impact resistant covering. This product meets missile level "D" and excludes Wind Zone 4 as defined in ASTM E1996 and FBC Sections 1609.1.2 & R301.2.1.2.

4. For 2x stud framing construction, anchoring of these units shall be the same as that shown for 2x buck masonry construction.

5. Site conditions that deviate from the details of this drawing require further engineering analysis by a licensed engineer or registered architect.

TABLE OF CONTENTS

SHEET#	DESCRIPTION
1	Typical elevations, design pressures & general notes
2	Door panel details
3	Sidelite panel details
4	Elevations
5	Horizontal & Vertical Cross Sections (2X Buck)
6	Horizontal & Vertical Cross Sections (1X Buck)
7	Horizontal & Vertical Cross Sections (Direct to Masonry)
8	Vertical Cross Sections (Thresholds)
9	Horizontal & Vertical Cross Sections (Direct to Masonry)
10	Buck anchoring
11	Frame anchoring & hardware details
12	Lite frame glazing details
13	Bill of materials and components

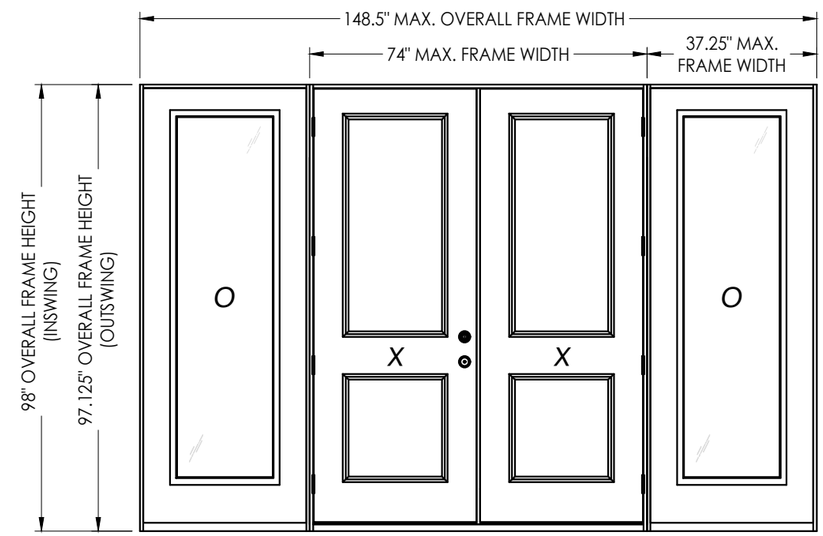

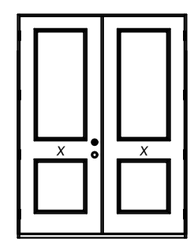

XX

CONFIG.	MAX. FRAME DIMENSION	DESIGN PRESSURE (PSF) INSWING		DESIGN PRESSURE (PSF) OUTSWING	
		POS.	NEG.	POS.	NEG.
XX	74.0" x 98.0"	+45.0	-50.0	+45.0	-45.0
OXXO	148.5" x 98.0"				

SEE SHEET 13 FOR ASTRAGAL DESIGN PRESSURE LIMITATIONS

Documents Prepared By:
Lyndon F. Schmidt
P.E. No. 43409
RW BUILDING CONSULTANTS, INC.
P.O. Box 230, Valrico, FL 33595
Phone No.: 813.659.9197
FBPE Registry No. 9813

PRODUCT: PLASTPRO INC FIBERGLASS DOOR

PART OR ASSEMBLY: TYPICAL ELEVATION, DESIGN PRESSURES & GENERAL NOTES

REVISIONS

NO.	DATE	BY
6	7/02/26	UPDATE TO 9TH ED. (2026) FBC	LFS
5	8/10/23	UPDATE TO 8TH ED. (2023) FBC	LFS
4	7/20/22	REVISE DOOR/SIDELITE PANELS	LFS

DATE: 10/08/14
SCALE: N.T.S.
DWG. BY: JK
CHK. BY: LFS
DRAWING NO.: FL-17347.16
SHEET 1 OF 13

© 2014 R.W. BUILDING CONSULTANTS INC.

G:\2023 FBC DRAWINGS 7-27-26\Plastpro\FL-17347 R7\FL-17347.15-16.dwg

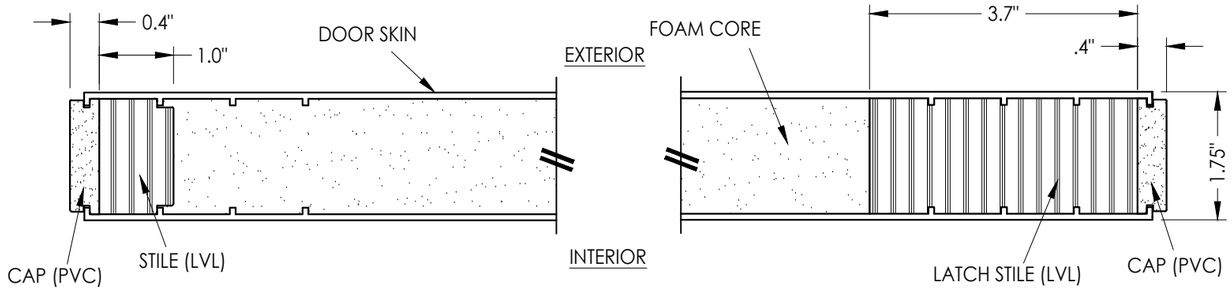

1/2 **HORIZONTAL CROSS SECTION**

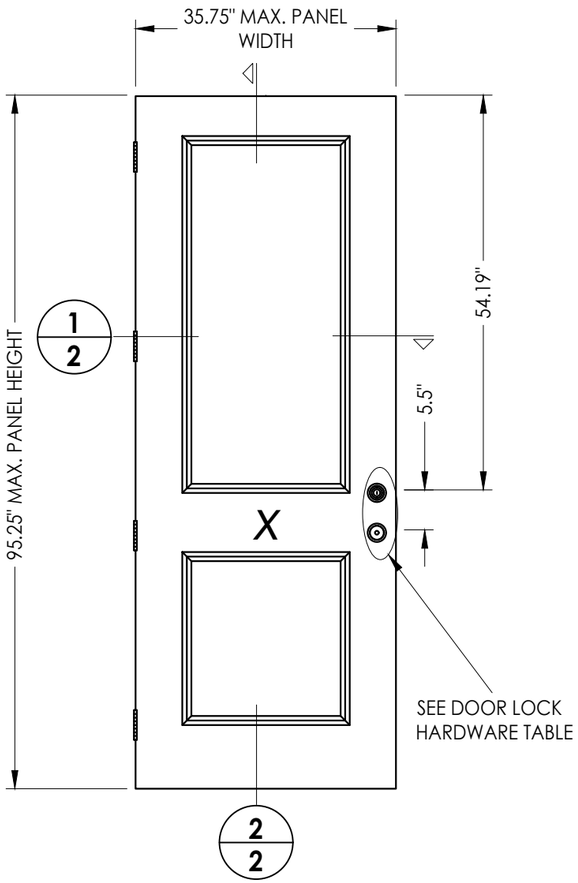

40 **PLASTPRO DOOR PANEL**

DOOR LOCK HARDWARE TABLE		
MANUFACTURER	MODEL	
KWIKSET	KNOB:	SERIES (400)
	DEADBOLT:	SERIES (660)
YALE	KNOB:	CIRRUS 100 C
	DEADBOLT:	820 SINGLE CYLINDER

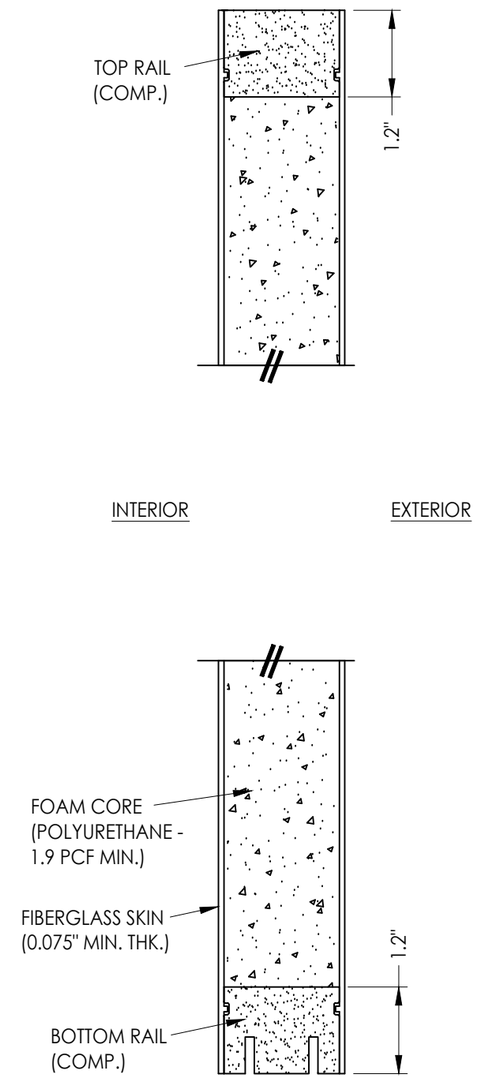

2/2 **VERTICAL CROSS SECTION**

Documents Prepared By:
Lyndon F. Schmidt
P.E. No. 43409
RW BUILDING CONSULTANTS, INC.
P.O. Box 230, Valrico, FL 33595
Phone No.: 813.659.9197
FBPE Registry No. 9813

PRODUCT: PLASTPRO INC FIBERGLASS DOOR

PART OR ASSEMBLY: DOOR PANEL DETAILS

REVISIONS

NO.	DATE	BY
6	7/02/26	UPDATE TO 9TH ED. (2026) FBC LFS
5	8/10/23	UPDATE TO 8TH ED. (2023) FBC LFS
4	7/20/22	REVISE DOOR/SIDELITE PANELS LFS

DATE: 10/08/14
SCALE: N.T.S.
DWG. BY: JK
CHK. BY: LFS
DRAWING NO.: FL-17347.16
SHEET 2 OF 13

© 2014 R.W. BUILDING CONSULTANTS INC.

G:\2023 FBC DRAWINGS 7-27-26\Plastpro\FL-17347 R7\FL-17347.15-16.dwg

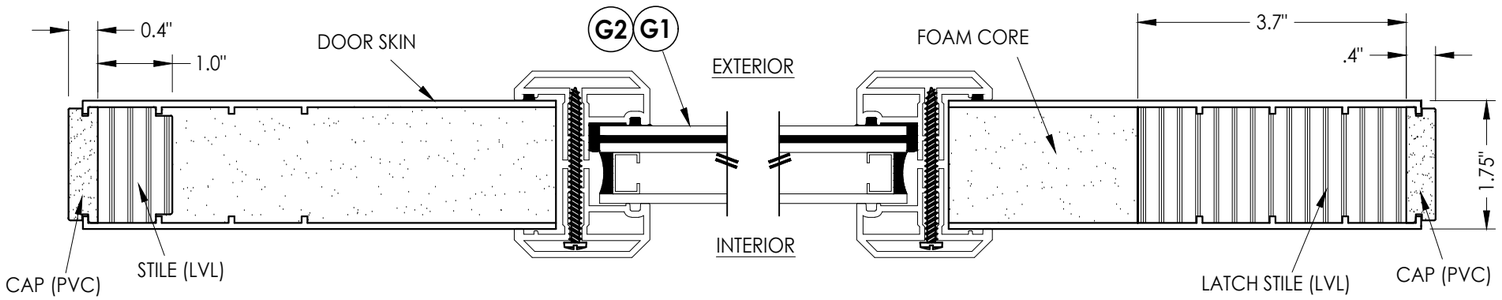

1/3 **HORIZONTAL CROSS SECTION**

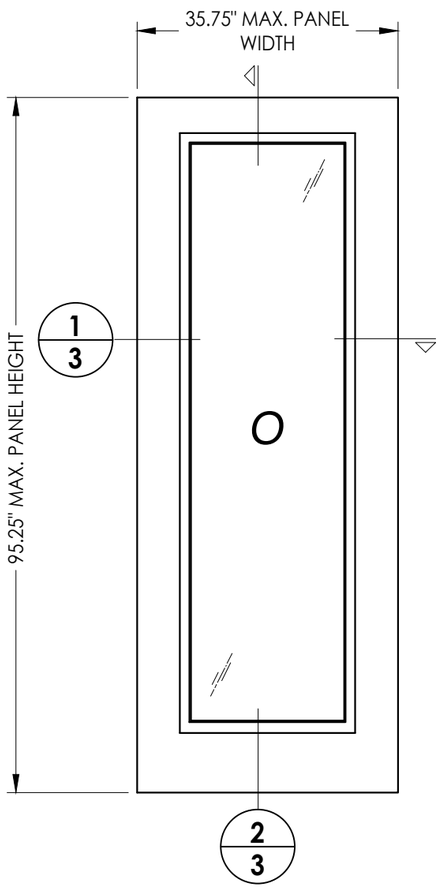

50 **PLASTPRO SIDELITE PANEL**

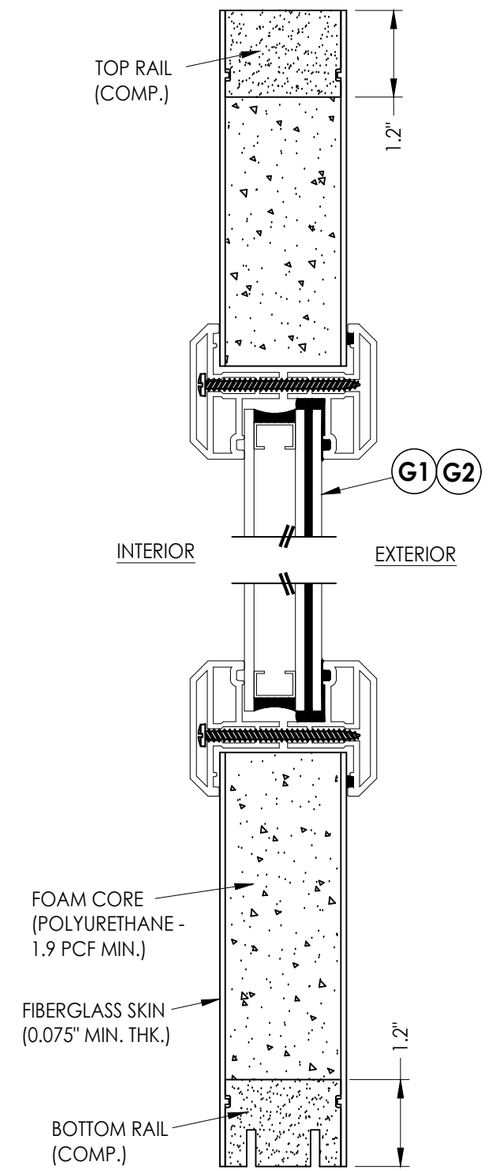

2/3 **VERTICAL CROSS SECTION**

Documents Prepared By:
Lyndon F. Schmidt
P.E. No. 43409
R.W. BUILDING CONSULTANTS, INC.
P.O. Box 230, Valrico, FL 33595
Phone No.: 813.659.9197
FBPE Registry No. 9813

PRODUCT: PLASTPRO INC FIBERGLASS DOOR

PART OR ASSEMBLY: SIDELITE PANEL DETAILS

NO.	DATE	REVISIONS	BY
6	7/02/26	UPDATE TO 9TH ED. (2026) FBC	LFS
5	8/10/23	UPDATE TO 8TH ED. (2023) FBC	LFS
4	7/20/22	REVISE DOOR/SIDELITE PANELS	LFS

DATE: 10/08/14
SCALE: N.T.S.
DWG. BY: JK
CHK. BY: LFS
DRAWING NO.: FL-17347.16
SHEET 3 OF 13

© 2014 R.W. Building Consultants Inc.

G:\2023 FBC DRAWINGS 7-27-26\Plastpro\FL-17347 R\FL-17347.15-16.dwg

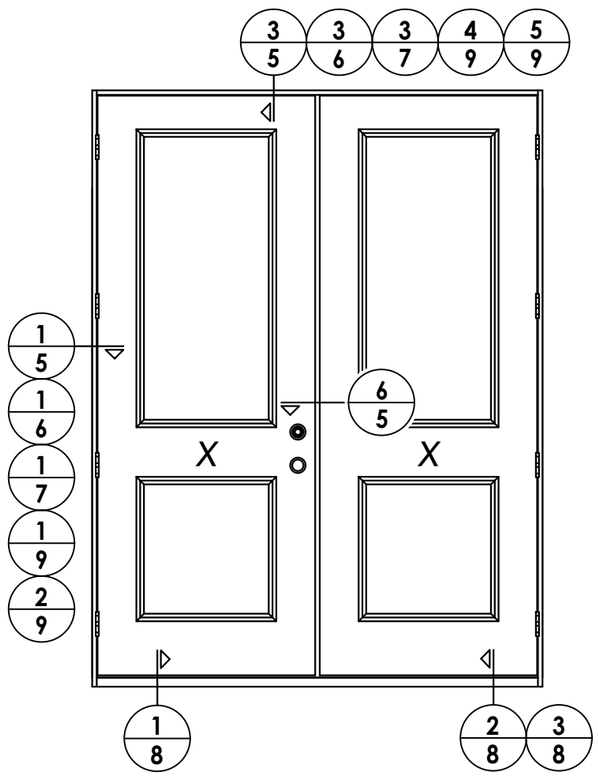

ELEVATION
XX

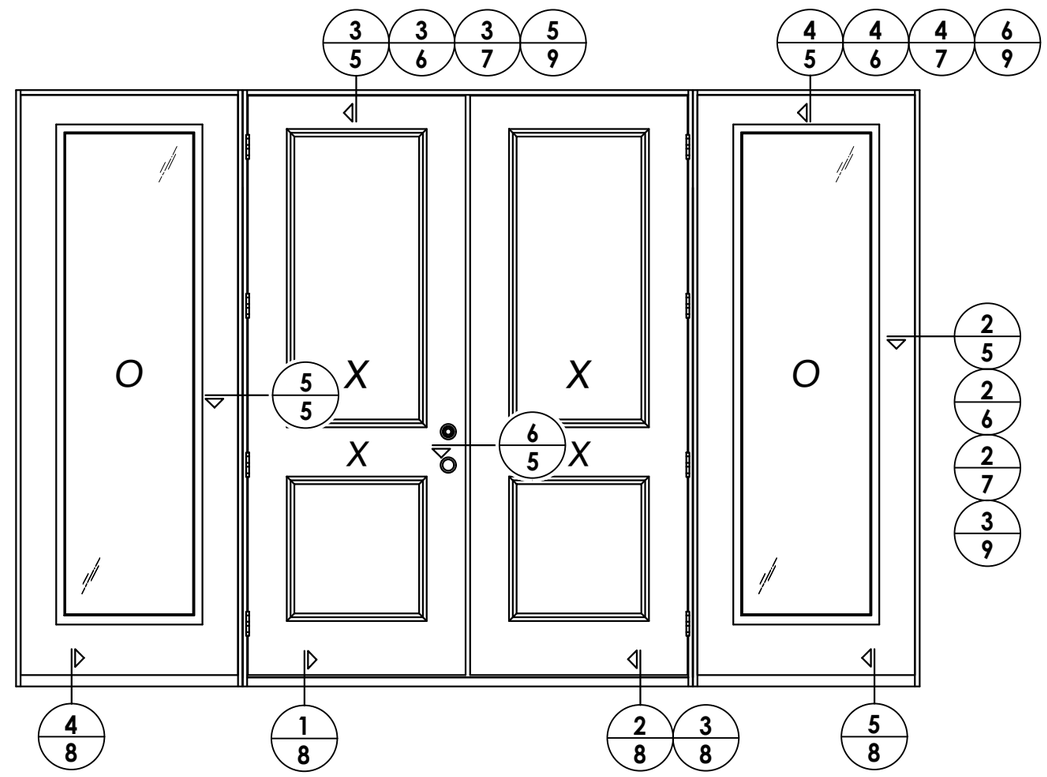

ELEVATION
OXXO

Documents Prepared By:
Lyndon F. Schmidt
P.E. No. 43409

RW BUILDING CONSULTANTS, INC.
P.O. Box 230, Valrico, FL 33595
Phone No.: 813.659.9197
FBPE Registry No. 9813

PRODUCT: PLASTPRO INC FIBERGLASS DOOR

PART OR ASSEMBLY: ELEVATIONS

REVISIONS

NO.	DATE		BY
6	7/02/26	UPDATE TO 9TH ED. (2026) FBC	LFS
5	8/10/23	UPDATE TO 8TH ED. (2023) FBC	LFS
4	7/20/22	REVISE DOOR/SIDELITE PANELS	LFS

DATE: 10/08/14
SCALE: N.T.S.
DWG. BY: JK
CHK. BY: LFS
DRAWING NO.: FL-17347.16
SHEET 4 OF 13

© 2014 R.W. Building Consultants Inc.

G:\2023 FBC DRAWINGS 7-27-26\Plastpro\FL-17347 R7\FL-17347.15-16.dwg

NOTE:
1. Spacing for item L: 6" from each end and 5 more equally spaced along sidelite jamb (7 total).
2. Spacing for item L @ head & sill: 6" from each end, 1 @ centerline, 2 additional at 3" & 4.5" from end adjacent to door.

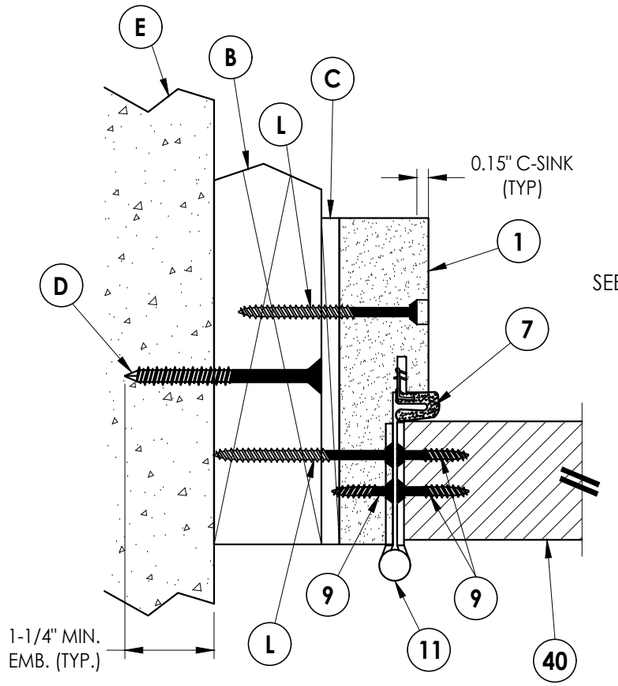

1/5 **HORIZONTAL CROSS SECTION**
Outswing shown (Inswing similar)

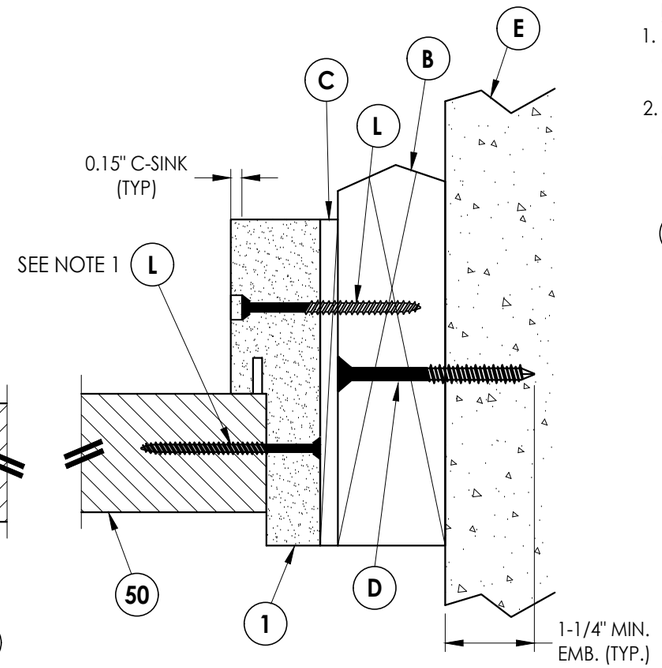

2/5 **HORIZONTAL CROSS SECTION**
Outswing shown (Inswing similar)

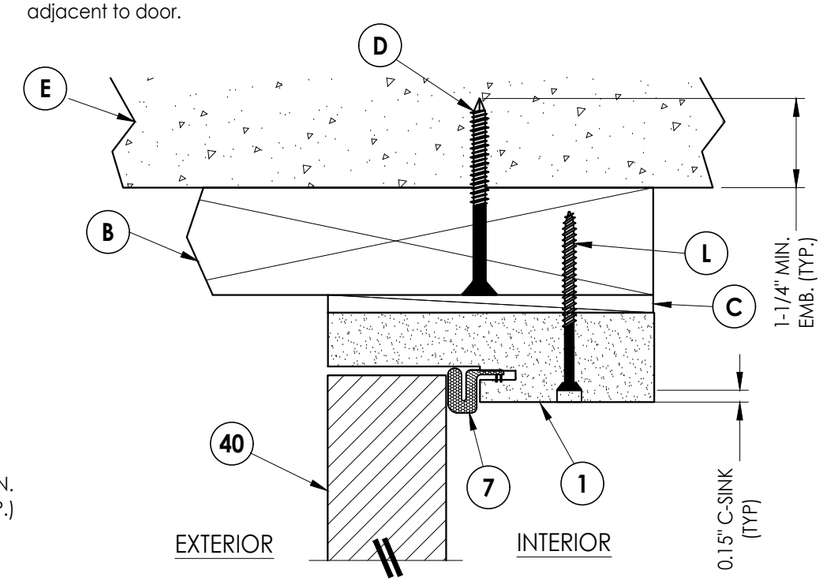

3/5 **VERTICAL CROSS SECTION**
Outswing shown (Inswing similar)

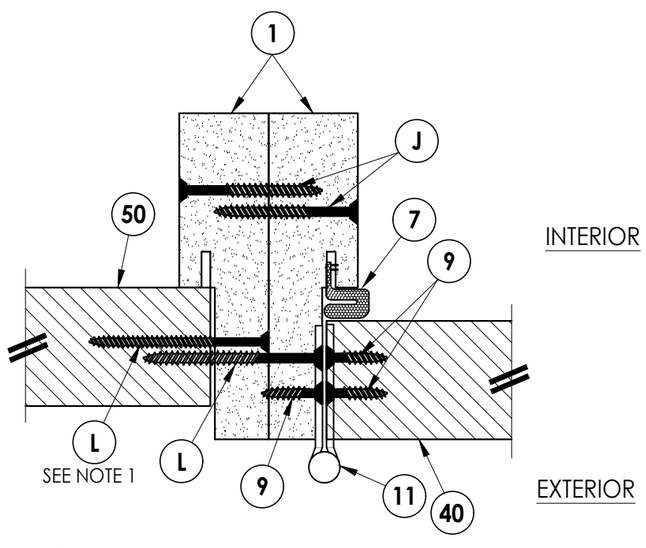

5/5 **HORIZONTAL CROSS SECTION**
Outswing shown (Inswing similar)

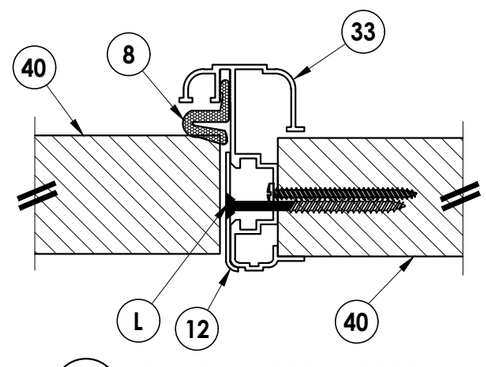

6/5 **HORIZONTAL CROSS SECTION**
Inswing shown (Outswing similar)

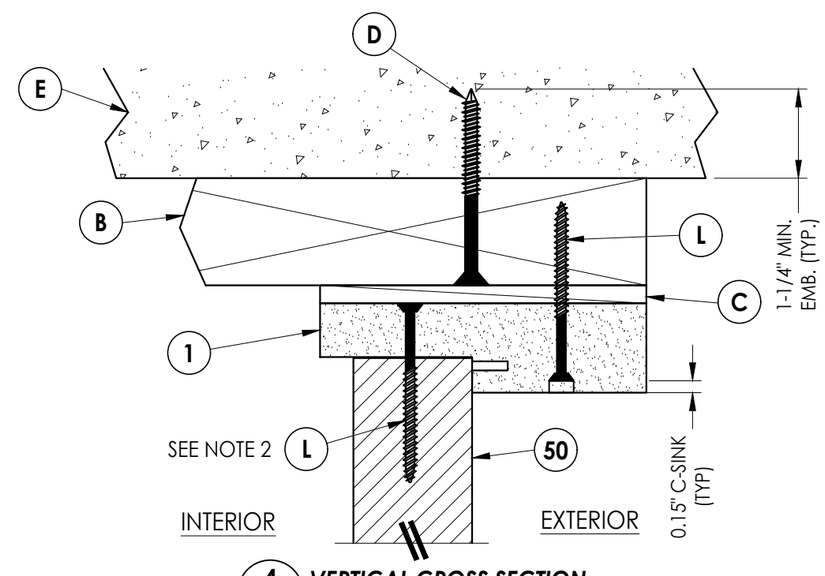

4/5 **VERTICAL CROSS SECTION**
Outswing shown (Inswing similar)

Documents Prepared By:
Lyndon F. Schmidt
P.E. No. 43409
R.W. BUILDING CONSULTANTS, INC.
P.O. Box 230, Valrico, FL 33595
Phone No.: 813.659.9197
FBPE Registry No. 9813

PRODUCT: PLASTPRO INC FIBERGLASS DOOR

PART OR ASSEMBLY: HORIZONTAL & VERTICAL CROSS SECTIONS (2X BUCK)

REVISIONS

NO.	DATE		BY
6	7/02/26	UPDATE TO 9TH ED. (2026) FBC	LFS
5	8/10/23	UPDATE TO 8TH ED. (2023) FBC	LFS
4	7/20/22	REVISE DOOR/SIDELITE PANELS	LFS

DATE: 10/08/14
SCALE: N.T.S.
DWG. BY: JK
CHK. BY: LFS
DRAWING NO.: FL-17347.16
SHEET 5 OF 13

© 2016 R.W. Building Consultants Inc.

G:\2023 FBC DRAWINGS 7-27-26\Plastpro\FL-17347 R7\FL-17347.15-16.dwg

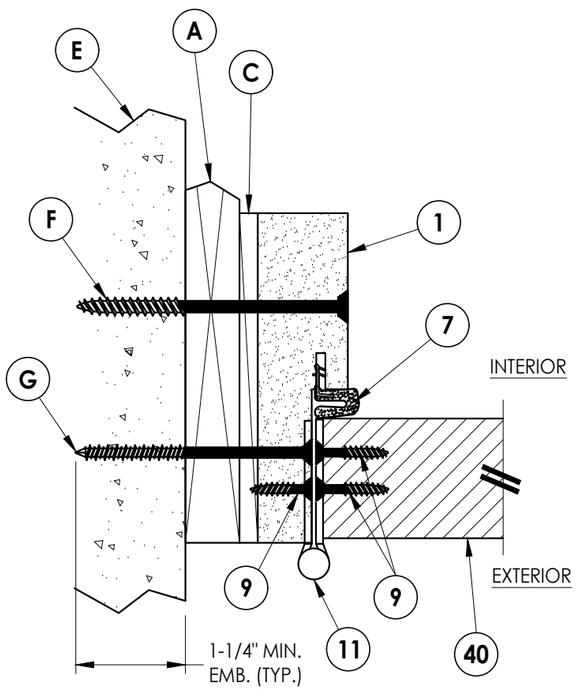

1/6 HORIZONTAL CROSS SECTION
Shown w/ 1X sub-buck
Outswing shown (Inswing similar)

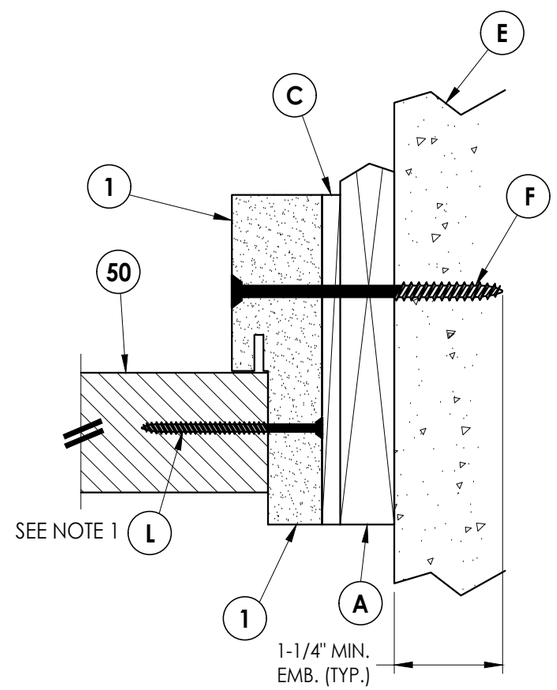

2/6 HORIZONTAL CROSS SECTION
Shown w/ 1X sub-buck
Outswing shown (Inswing similar)

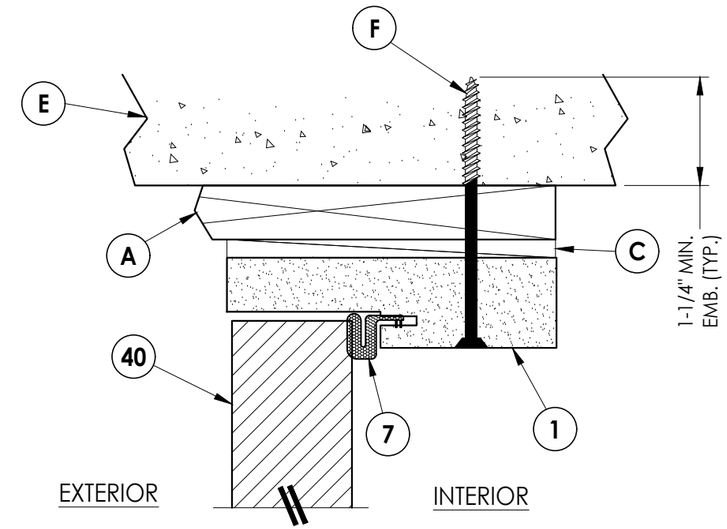

3/6 VERTICAL CROSS SECTION
Shown w/ 1X sub-buck
Outswing shown (Inswing similar)

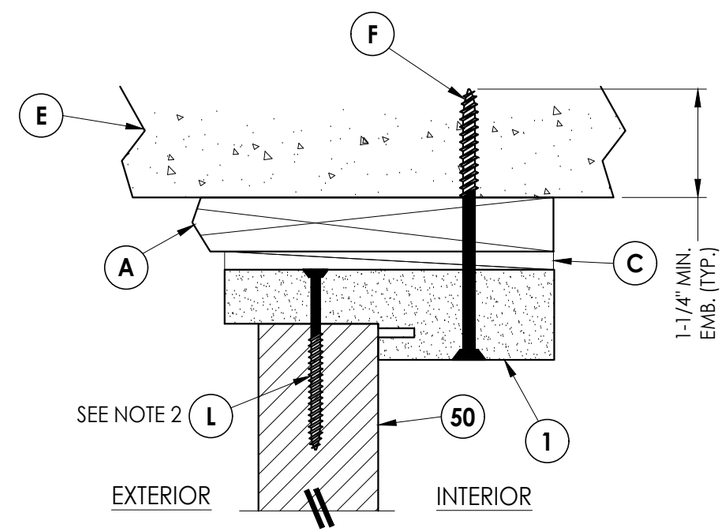

4/6 VERTICAL CROSS SECTION
Shown w/ 1X sub-buck
Outswing shown (Inswing similar)

NOTE:
1. Spacing for item L: 6" from each end and 5 more equally spaced along sidelite jamb (7 total).
2. Spacing for item L @ head & sill: 6" from each end, 1 @ centerline, 2 additional at 3" & 4.5" from end adjacent to door.

Documents Prepared By:
Lyndon F. Schmidt
P.E. No. 43409
RW BUILDING CONSULTANTS, INC.
P.O. Box 230, Valrico, FL 33595
Phone No.: 813.659.9197
FBPE Registry No. 9813

PRODUCT: PLASTPRO INC FIBERGLASS DOOR

PART OR ASSEMBLY: HORIZONTAL & VERTICAL CROSS SECTIONS (1X BUCK)

NO.	DATE	REVISIONS	BY
6	7/02/26	UPDATE TO 9TH ED. (2026) FBC	LFS
5	8/10/23	UPDATE TO 8TH ED. (2023) FBC	LFS
4	7/20/22	REVISE DOOR/SIDELITE PANELS	LFS

DATE: 10/08/14
SCALE: N.T.S.
DWG. BY: JK
CHK. BY: LFS
DRAWING NO.: FL-17347.16
SHEET 6 OF 13

© 2016 R.W. Building Consultants Inc.

G:\2023 FBC DRAWINGS 7-27-26\Plastpro\FL-17347 R7\FL-17347.15-16.dwg

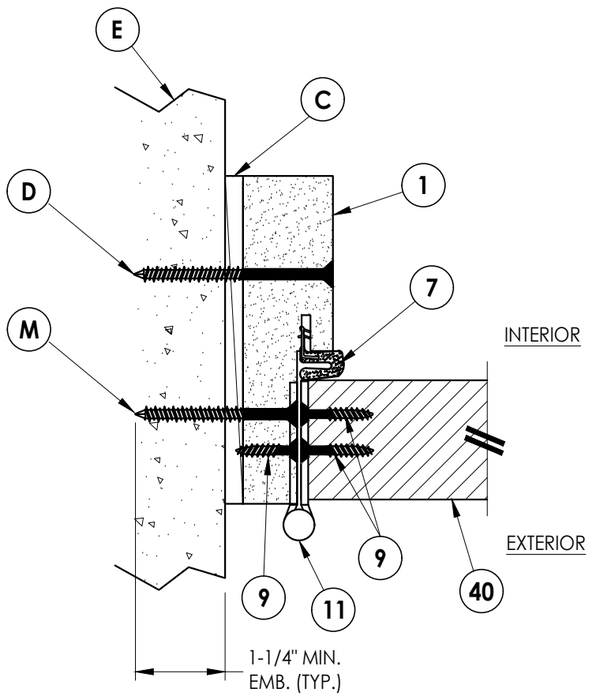

1/7 HORIZONTAL CROSS SECTION
Shown Direct to Masonry
Outswing shown (Inswing similar)

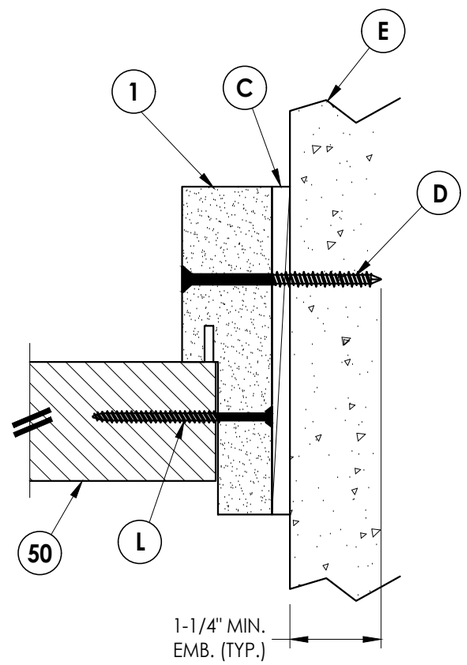

2/7 HORIZONTAL CROSS SECTION
Shown Direct to Masonry
Outswing shown (Inswing similar)

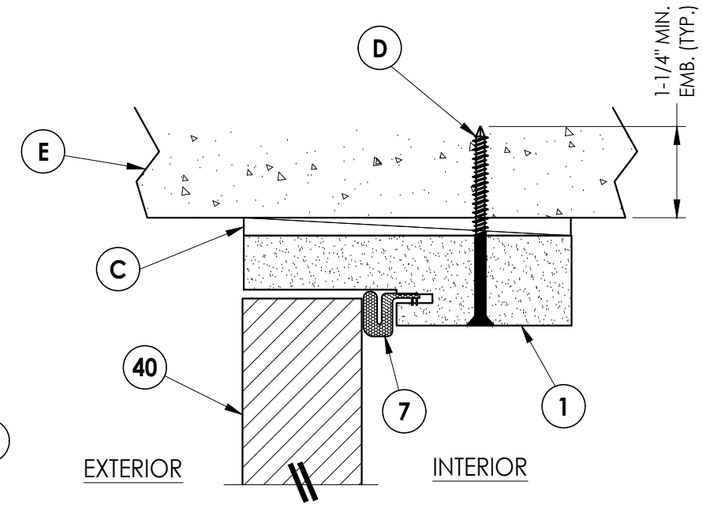

3/7 VERTICAL CROSS SECTION
Shown Direct to Masonry
Outswing shown (Inswing similar)

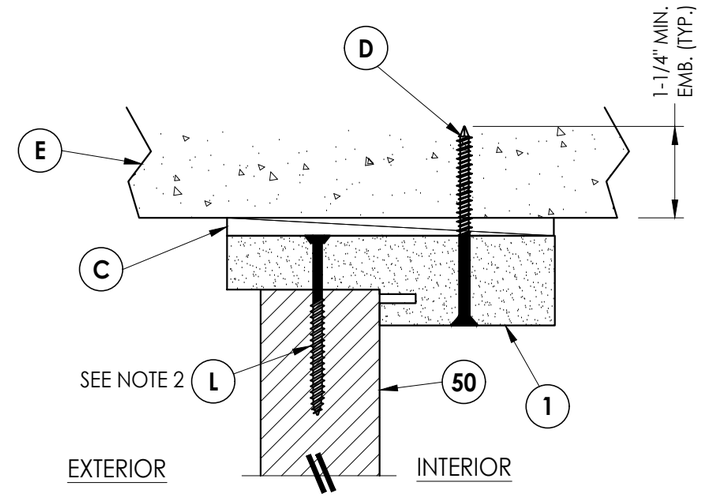

4/7 VERTICAL CROSS SECTION
Shown Direct to Masonry
Outswing shown (Inswing similar)

NOTE:
1. Spacing for item L: 6" from each end and 5 more equally spaced along sidelite jamb (7 total).
2. Spacing for item L @ head & sill: 6" from each end, 1 @ centerline, 2 additional at 3" & 4.5" from end adjacent to door.

Documents Prepared By:
Lyndon F. Schmidt
P.E. No. 43409
R.W. BUILDING CONSULTANTS, INC.
P.O. Box 230, Valrico, FL 33595
Phone No.: 813.659.9197
FBPE Registry No. 9813

PRODUCT: PLASTPRO INC FIBERGLASS DOOR

PART OR ASSEMBLY: HORIZONTAL & VERTICAL CROSS SECTIONS (DIRECT TO MASONRY)

NO.	DATE	BY
6	7/02/26	LFS
5	8/10/23	LFS
4	7/20/22	LFS

REVISIONS: UPDATE TO 9TH ED. (2026) FBC; UPDATE TO 8TH ED. (2023) FBC; REVISE DOOR/SIDELITE PANELS

DATE: 10/08/14
SCALE: N.T.S.
DWG. BY: JK
CHK. BY: LFS
DRAWING NO.: FL-17347.16
SHEET 7 OF 13

© 2016 R.W. Building Consultants Inc.

G:\2023 FBC DRAWINGS 7-27-26\Plastpro\FL-17347 R7\FL-17347.15-16.dwg

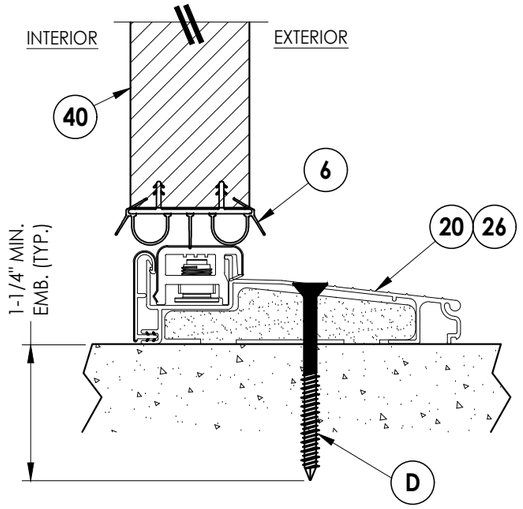

1/8 VERTICAL CROSS SECTION
Inswing sill

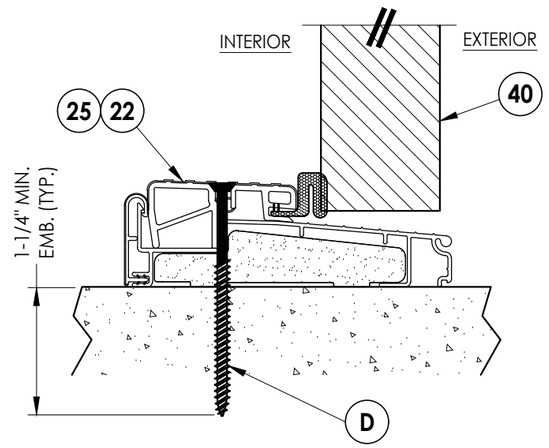

2/8 VERTICAL CROSS SECTION
Outswing sill

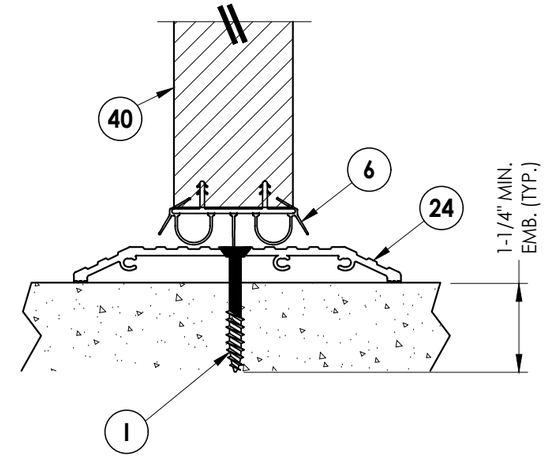

3/8 VERTICAL CROSS SECTION
ADA Sill

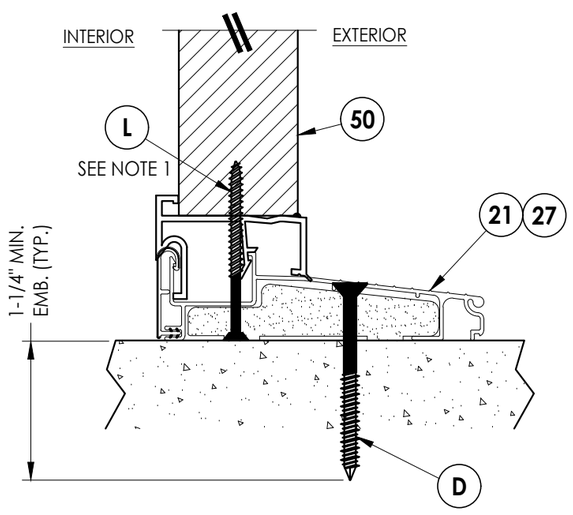

4/8 VERTICAL CROSS SECTION
Inswing sill

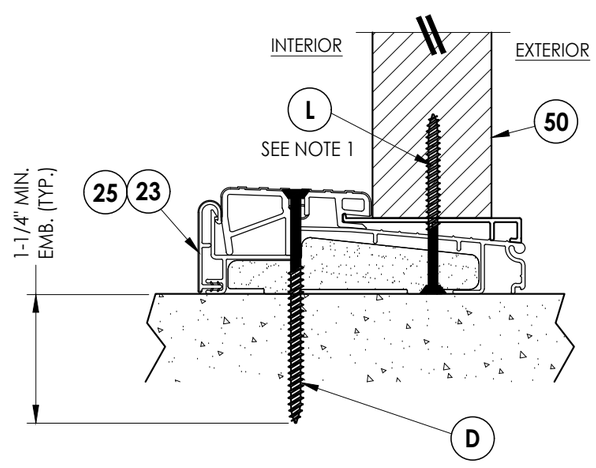

5/8 VERTICAL CROSS SECTION
Inswing sill

NOTE:
1. Spacing for item L @ head & sill: 6" from each end, 1 @ centerline, 2 additional at 3" & 4.5" from end adjacent to door.

Documents Prepared By:
Lyndon F. Schmidt
P.E. No. 43409
RW BUILDING CONSULTANTS, INC.
P.O. Box 230, Valrico, FL 33595
Phone No.: 813.659.9197
FBPE Registry No. 9813

PRODUCT: *PLASTPRO INC FIBERGLASS DOOR*

PART OR ASSEMBLY: *VERTICAL CROSS SECTIONS (THRESHOLDS)*

REVISIONS

NO.	DATE		BY
6	7/02/26	UPDATE TO 9TH ED. (2026) FBC	LFS
5	8/10/23	UPDATE TO 8TH ED. (2023) FBC	LFS
4	7/20/22	REVISE DOOR/SIDELITE PANELS	LFS

DATE: 10/08/14
SCALE: N.T.S.
DWG. BY: JK
CHK. BY: LFS
DRAWING NO.: FL-17347.16
SHEET 8 OF 13

© 2016 R.W. BUILDING CONSULTANTS INC.

G:\2023 FBC DRAWINGS 7-27-26\Plastpro\FL-17347 R7\FL-17347.15-16.dwg

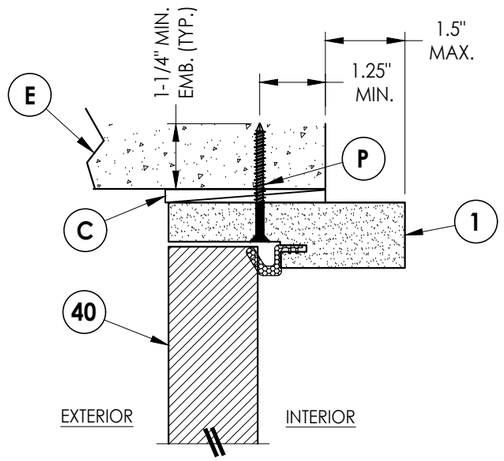

4/9 VERTICAL CROSS SECTION
Shown Direct to Masonry
Outswing only w/ 4-9/16" jamb
Double Door Only (N/A w/ Sidelites)

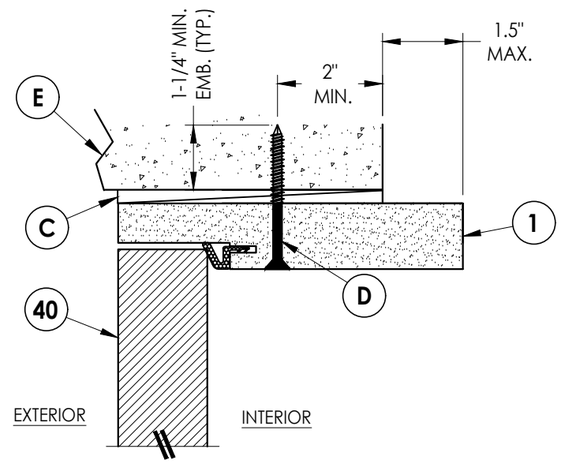

5/9 VERTICAL CROSS SECTION
Shown Direct to Masonry
Outswing only w/ 6-9/16" jamb

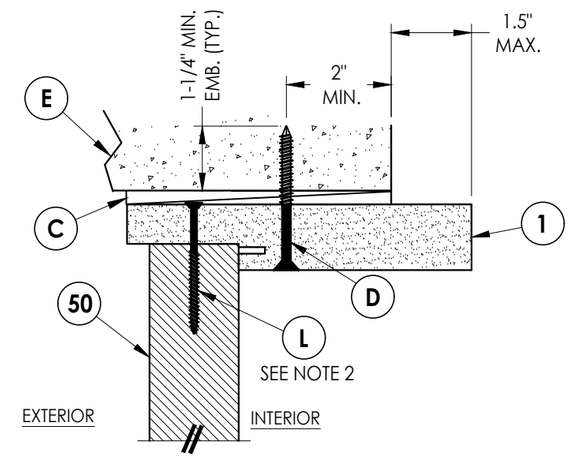

6/9 VERTICAL CROSS SECTION
Shown Direct to Masonry
Outswing only w/ 6-9/16" jamb

Note:
1. Sidelite assembly screws located 6" from top and bottom then 5 more equally spaced (7 total).
2. Spacing for item L: 3" from each end and @ center line (3 total).

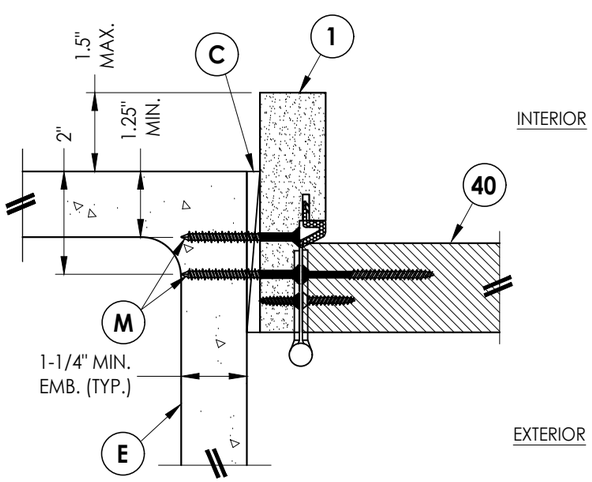

1/9 HORIZONTAL CROSS SECTION
Shown Direct to Masonry
Outswing only w/ 4-9/16" jamb
Double Door Only (N/A w/ Sidelites)

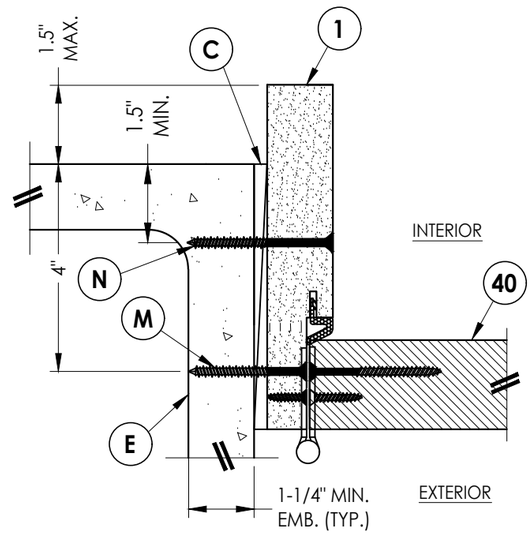

2/9 HORIZONTAL CROSS SECTION
Shown Direct to Masonry
Outswing only w/ 6-9/16" jamb

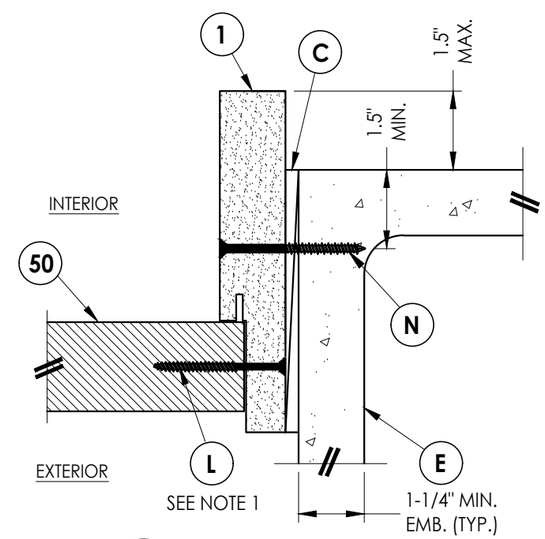

3/9 HORIZONTAL CROSS SECTION
Shown Direct to Masonry
Outswing only w/ 6-9/16" jamb

Documents Prepared By:
Lyndon F. Schmidt
P.E. No. 43409

RW BUILDING CONSULTANTS, INC.
P.O. Box 230, Valrico, FL 33595
Phone No.: 813.659.9197
FBPE Registry No. 9813

PRODUCT: PLASTPRO INC FIBERGLASS DOOR

PART OR ASSEMBLY: HORIZONTAL & VERTICAL SECTIONS (DIRECT TO MASONRY)

REVISIONS

NO.	DATE		BY
6	7/02/26	UPDATE TO 9TH ED. (2026) FBC	LFS
5	8/10/23	UPDATE TO 8TH ED. (2023) FBC	LFS
4	7/20/22	REVISE DOOR/SIDELITE PANELS	LFS

DATE: 10/08/14
SCALE: N.T.S.
DWG. BY: JK
CHK. BY: LFS
DRAWING NO.: FL-17347.16
SHEET 9 OF 13

© 2012 R.W. Building Consultants Inc.

G:\2023 FBC DRAWINGS 7-27-26\Plastpro\FL-17347 R7\FL-17347.15-16.dwg

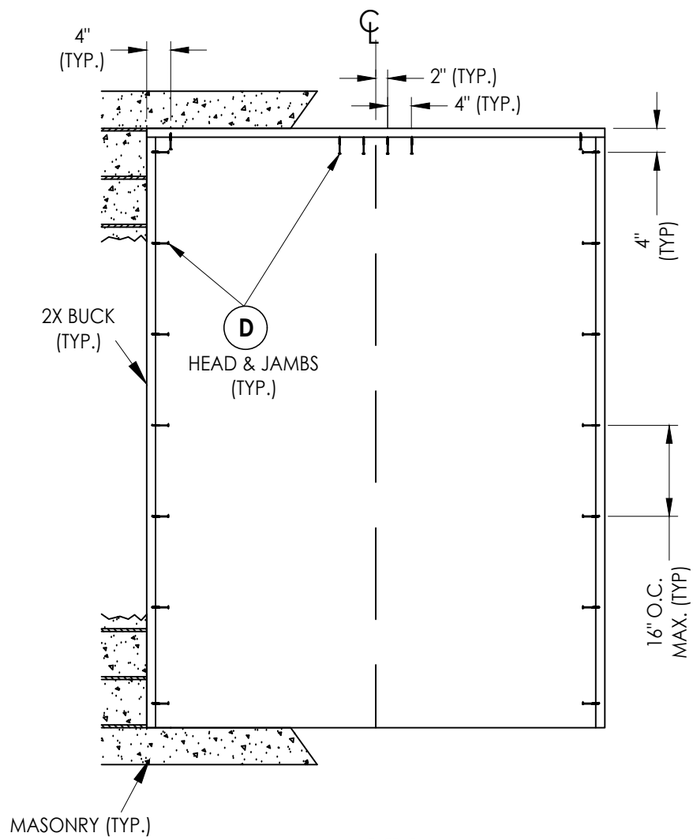

XX

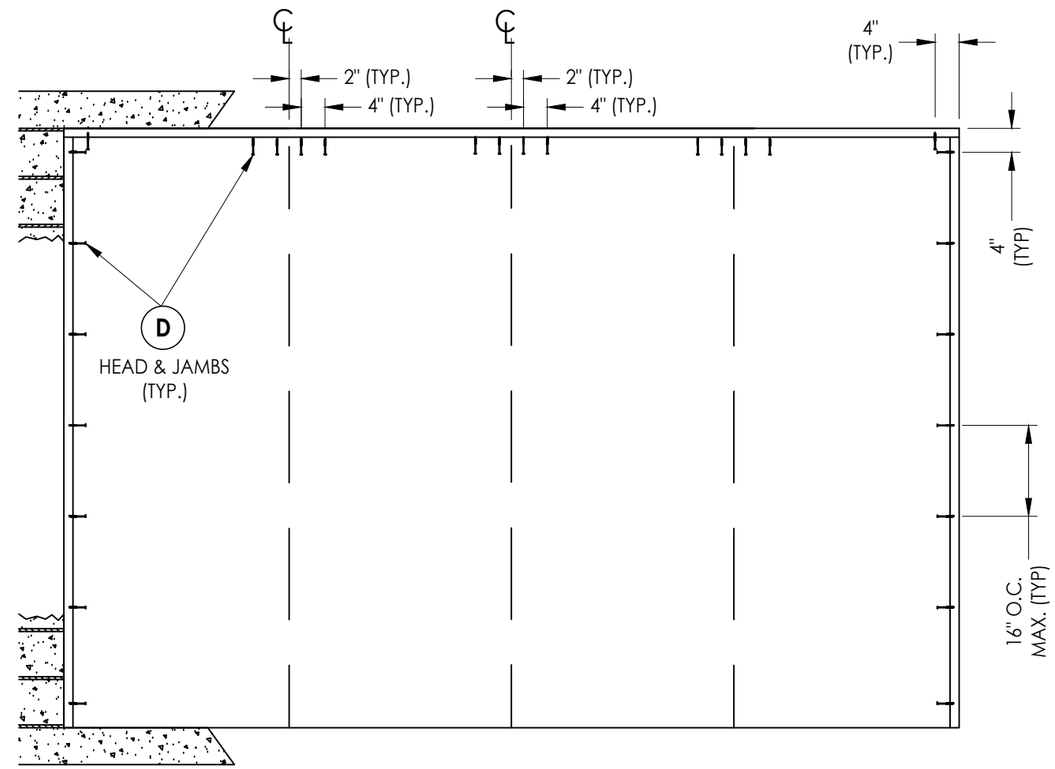

OXXO

2X BUCK ANCHORING

Documents Prepared By:
Lyndon F. Schmidt
P.E. No. 43409
RW BUILDING CONSULTANTS, INC.
P.O. Box 230, Valrico, FL 33595
Phone No.: 813.659.9197
FBPE Registry No. 9813

PRODUCT: PLASTPRO INC FIBERGLASS DOOR

PART OR ASSEMBLY: BUCK ANCHORING

REVISIONS

NO.	DATE		BY
6	7/02/26	UPDATE TO 9TH ED. (2026) FBC	LFS
5	8/10/23	UPDATE TO 8TH ED. (2023) FBC	LFS
4	7/20/22	REVISE DOOR/SIDELITE PANELS	LFS

DATE: 10/08/14
SCALE: N.T.S.
DWG. BY: JK
CHK. BY: LFS
DRAWING NO.: FL-17347.16
SHEET 10 OF 13

© 2014 R.W. Building Consultants Inc.

G:\2023 FBC DRAWINGS 7-27-26\Plastpro\FL-17347 R7\FL-17347.15-16.dwg

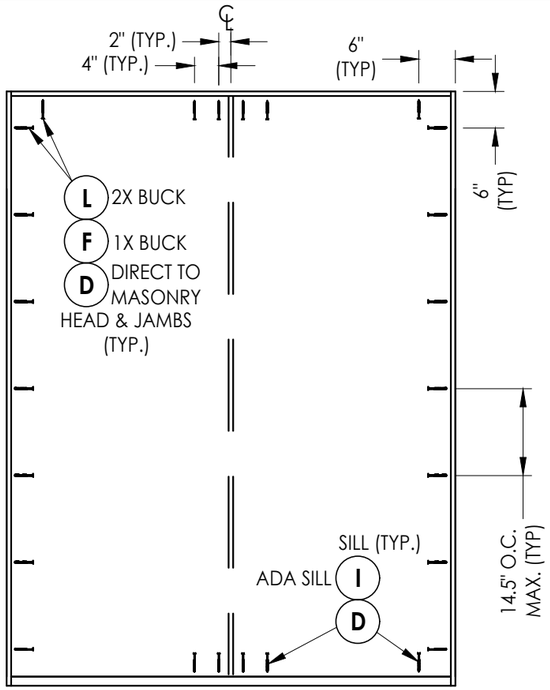

XX

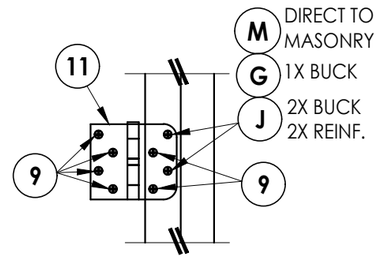

HINGE DETAIL 1

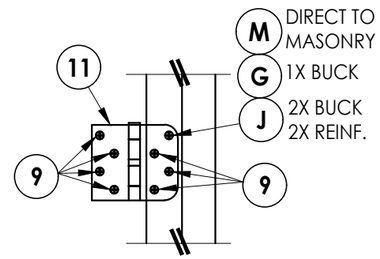

HINGE DETAIL 2

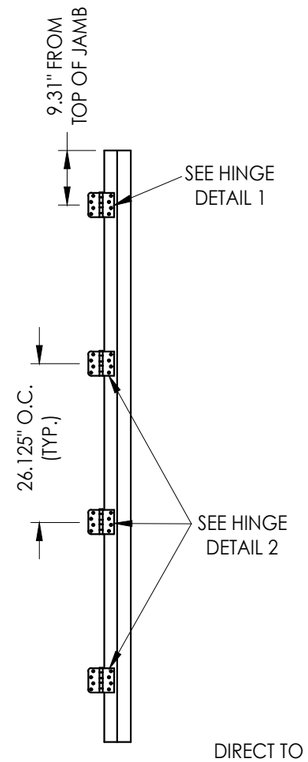

HINGE JAMB

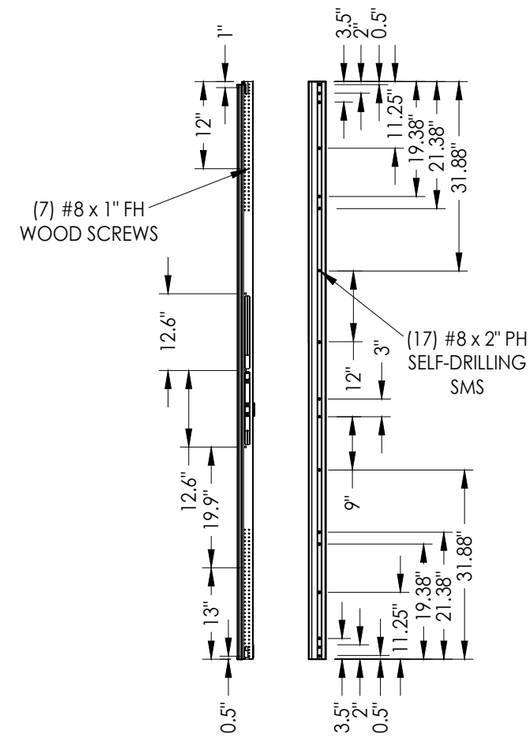

Endura **DLP**

ASTRAGAL SCREW LOCATIONS

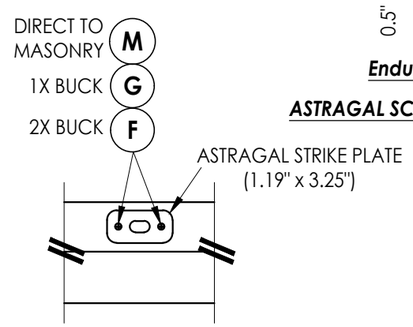

ASTRAGAL BOLT DETAIL
Strike Plate @ Head

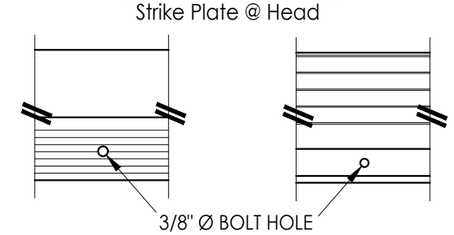

ASTRAGAL BOLT DETAIL
Outswing Threshold

ASTRAGAL BOLT DETAIL
Inswing Threshold

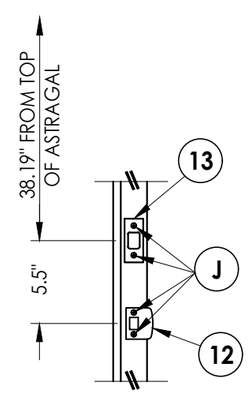

LATCH AND DEADBOLT DETAILS

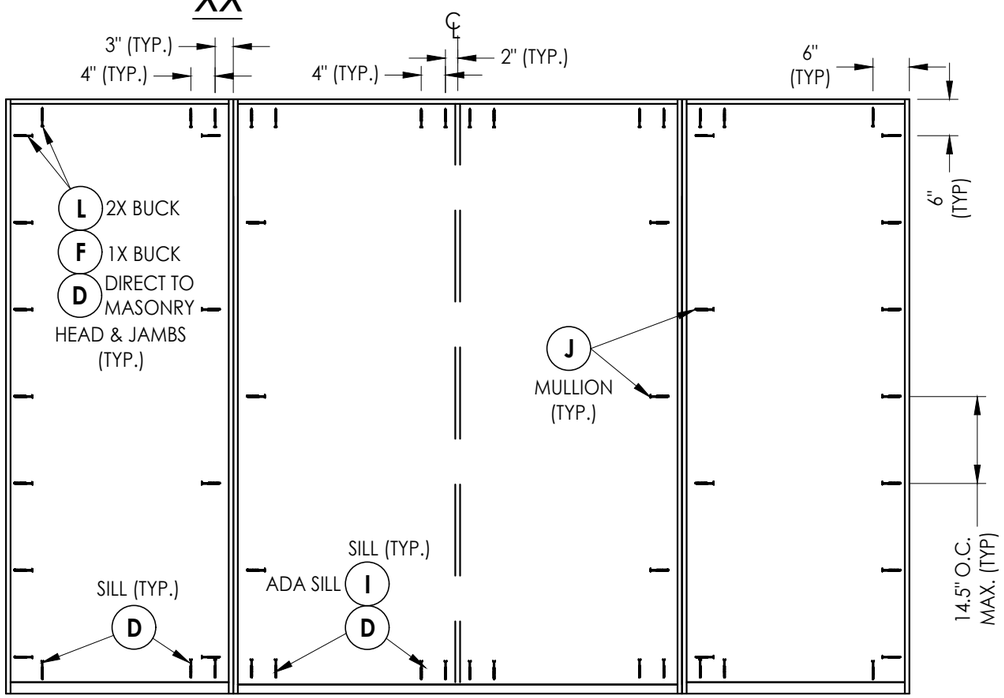

OXXO

FRAME ANCHORING

CORROSION RESISTANCE - SALTWATER ENVIRONMENT

Fasteners & connectors in areas within 3000 ft (914 m) of a saltwater coastline shall comply with FBC Sections 1711.1 or R332.1.

HARDWARE DETAILS

Documents Prepared By:
Lyndon F. Schmidt
P.E. No. 43409
R.W. BUILDING CONSULTANTS, INC.
P.O. Box 230, Valrico, FL 33595
Phone No.: 813.659.9197
FBPE Registry No. 9813

PRODUCT: PLASTPRO INC FIBERGLASS DOOR

PART OR ASSEMBLY: FRAME ANCHORING & HARDWARE DETAILS

REVISIONS

NO.	DATE		BY
6	7/02/26	UPDATE TO 9TH ED. (2026) FBC	LFS
5	8/10/23	UPDATE TO 8TH ED. (2023) FBC	LFS
4	7/20/22	REVISE DOOR/SIDELITE PANELS	LFS

DATE: 10/08/14
SCALE: N.T.S.
DWG. BY: JK
CHK. BY: LFS
DRAWING NO.: FL-17347.16
SHEET 11 OF 13

© 2014 R.W. BUILDING CONSULTANTS INC.

G:\2023 FBC DRAWINGS 7-27-26\Plastpro\FL-17347 R7\FL-17347.15-16.dwg

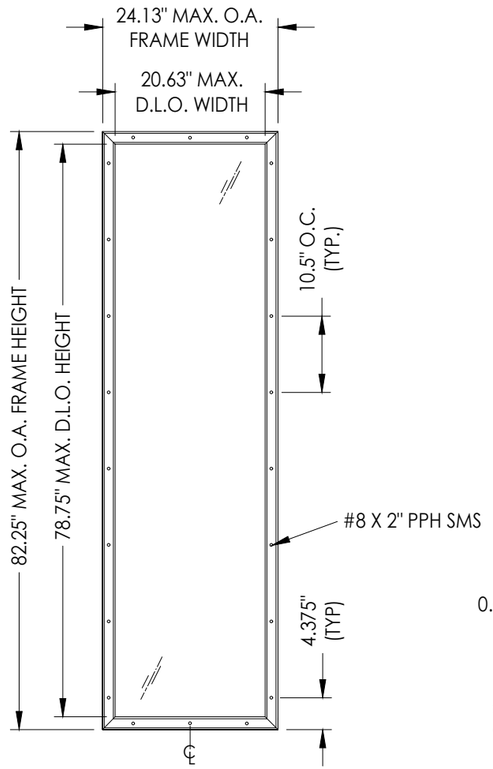

ODL LITE FRAME DETAIL
"FLAT FRAME" PROFILE

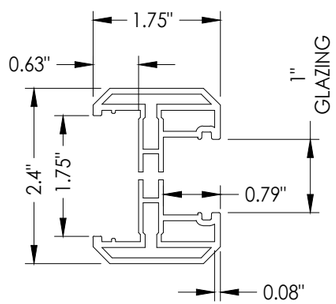

3A ***ODL LITE FRAME***
"FLAT FRAME" PROFILE
(6063-T5 ALUM)

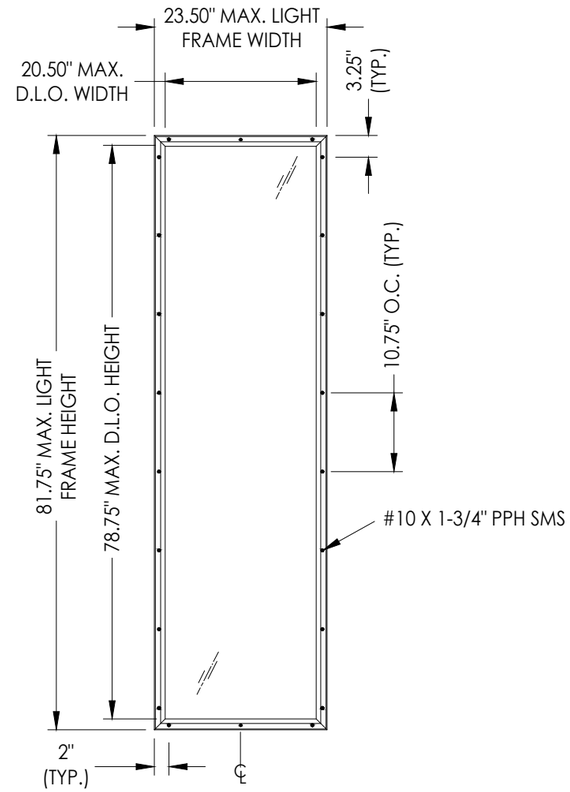

RSL LITE FRAME

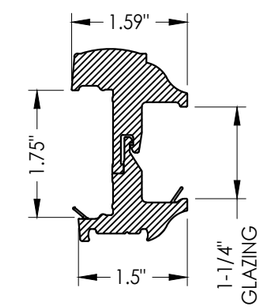

3B ***RSL LITE FRAME***
PVC

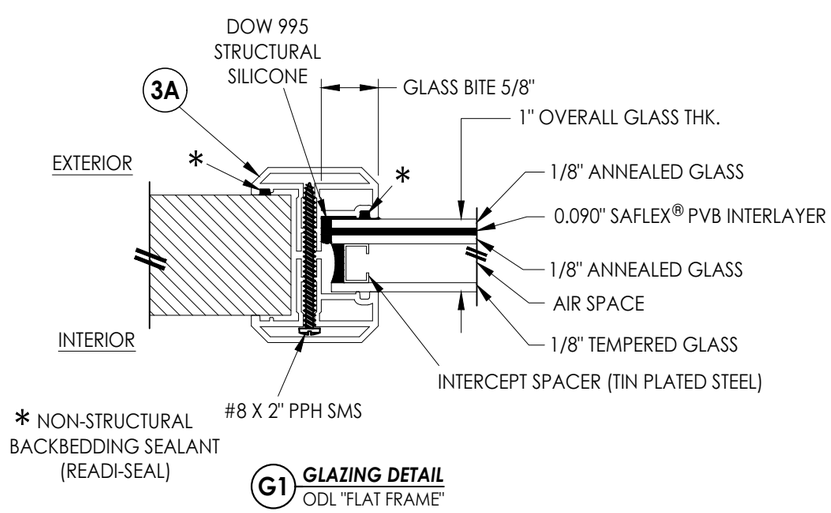

G1 ***GLAZING DETAIL***
ODL "FLAT FRAME"

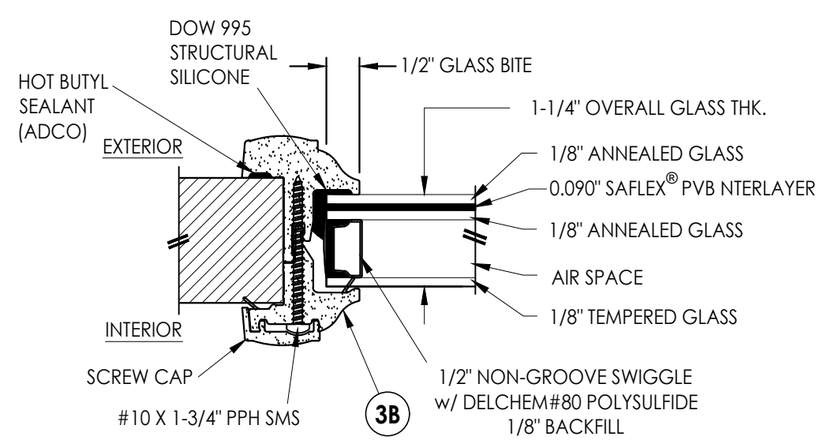

G2 ***GLAZING DETAIL***
RSL Lite Frame

Documents Prepared By:
Lyndon F. Schmidt
P.E. No. 43409

RW BUILDING CONSULTANTS, INC.
P.O. Box 230, Valrico, FL 33595
Phone No.: 813.659.9197
FBPE Registry No. 9813

PRODUCT: *PLASTPRO INC FIBERGLASS DOOR*

PART OR ASSEMBLY: *LITE FRAME GLAZING DETAILS*

REVISIONS

NO.	DATE	BY
4	7/20/22	LFS
5	8/10/23	LFS
6	7/02/26	LFS

REVISE DOOR/SIDELITE PANELS
UPDATE TO 8TH ED. (2023) FBC
UPDATE TO 9TH ED. (2026) FBC

DATE: *10/08/14*
SCALE: *N.T.S.*
DWG. BY: *JK*
CHK. BY: *LFS*
DRAWING NO.: *FL-17347.16*
SHEET *12* OF *13*

© 2014 R.W. BUILDING CONSULTANTS INC.

G:\2023 FBC DRAWINGS 7-27-26\Plastpro\FL-17347 R7\FL-17347.15-16.dwg

BILL OF MATERIALS

ITEM #	DESCRIPTION	MATERIAL
A	1X BUCK (G >= 0.42)	WOOD
B	2X BUCK (G >= 0.42)	WOOD
C	1/4" MAX. SHIM SPACE	-
D	1/4" PFH CONCRETE SCREW (1-1/4" MIN. EMB.)	STEEL
E	MASONRY - 3,000 PSI MIN. CONCRETE CONFORMING TO ACI 301 OR HOLLOW BLOCK CONFORMING TO ASTM C90	CONCRETE
F	1/4" X 3-3/4" PFH DeWALT OR ITW CONCRETE SCREW	STEEL
G	3/16" x 3-1/4" PFH ITW CONCRETE SCREW	STEEL
I	1/4" X 1-3/4" PFH DeWALT OR ITW CONCRETE SCREW	STEEL
L	#10 X 2-1/2" PFH WOOD SCREW (1.15" MIN. EMB.)	STEEL
M	3/16" X 2-1/4" ITW CONCRETE SCREW	STEEL
N	3/16" X 2-3/4" ITW CONCRETE SCREW	STEEL
P	1/4" X 2-1/4" PFH DeWALT CONCRETE SCREW	STEEL
1	POLY FIBER JAMB	COMP.
6	DOOR SWEEP	PVC
7	WEATHERSTRIP (ENDURA FORCE 5)	FOAM
8	WEATHERSTRIP (Q-LON)	FOAM
9	#9 x 3/4" PFH WOOD SCREW	STEEL
11	4" X 4" HINGE	STEEL
12	LATCH STRIKE PLATE	STEEL
13	DEADBOLT STRIKE PLATE	STEEL
20	INSWING THRESHOLD	ALUM/COMP
21	INSWING THRESHOLD w/ SIDELITE ADAPTER	ALUM/COMP
22	OUTSWING THRESHOLD	ALUM/COMP
23	OUTSWING THRESHOLD w/ SIDELITE ADAPTER	ALUM/COMP
24	ADA THRESHOLD	ALUM
25	OUTSWING THRESHOLD	ALUM/WOOD
26	INSWING THRESHOLD	ALUM/WOOD
27	INSWING THRESHOLD w/ SIDELITE ADAPTER	ALUM/WOOD
33	ASTRAGAL (DLP OR ENDURA)	ALUM
40	DOOR PANEL	-
50	SIDELITE PANEL	-

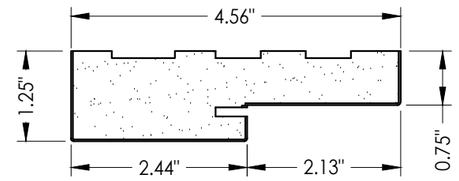

1 POLY FIBER JAMB

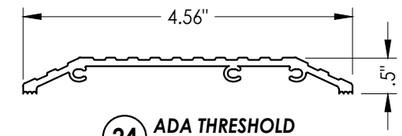

24 ADA THRESHOLD
DLP

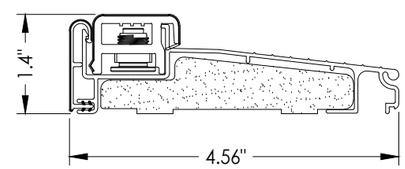

20 INSWING THRESHOLD
Endura (Z-Series)

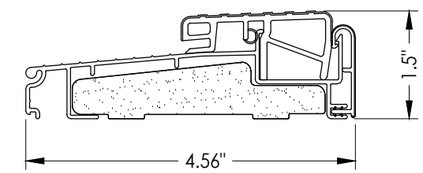

22 OUTSWING THRESHOLD
Endura (Z-Series)

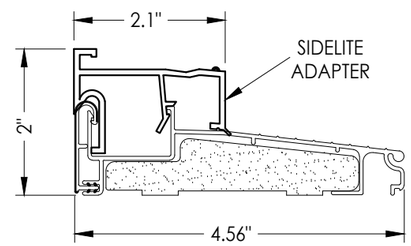

21 INSWING THRESHOLD w/ SIDELITE ADAPTER
Endura (Z-Series)

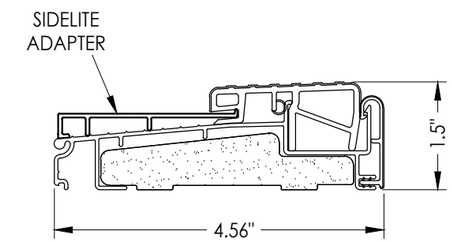

23 OUTSWING THRESHOLD w/ SIDELITE ADAPTER
Endura (Z-Series)

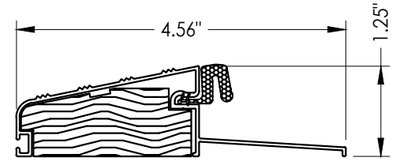

25 OUTSWING THRESHOLD
DLP

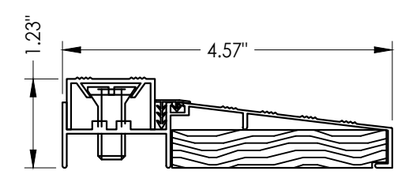

26 INSWING THRESHOLD
DLP

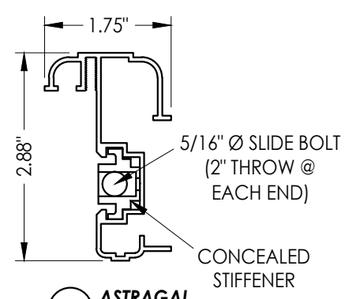

33 ASTRAGAL
DLP

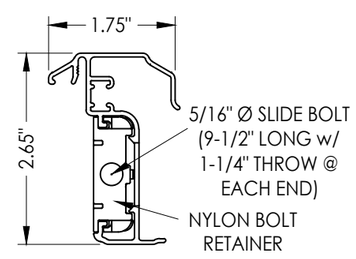

33 ENDURA ASTRAGAL
Ultimate Hurricane

MAX. DESIGN PRESSURE = ±45 PSF

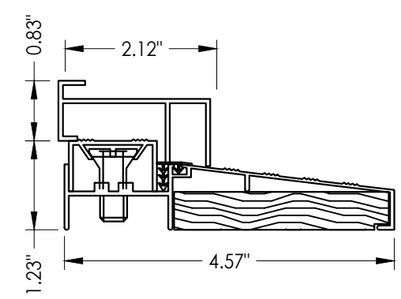

27 INSWING THRESHOLD w/ SIDELITE ADAPTER
DLP

CONCRETE ANCHOR NOTES:

1. *Concrete anchor locations at the corners may be adjusted to maintain the min. edge distance to mortar joints.*
2. *Concrete anchor locations noted as "MAX. ON CENTER" must be adjusted to maintain the min. edge distance to mortar joints, additional concrete anchors may be required to ensure the "MAX. ON CENTER" dimension are not exceeded.*
3. *Concrete anchor table:*

ANCHOR TYPE	ANCHOR SIZE	MIN. EMBEDMENT	MIN. CLEARANCE TO MASONRY EDGE	MIN. CLEARANCE TO ADJACENT ANCHOR
ITW BUILDEX TAPCON®	3/16"	1-1/4"	3"	1-1/2"
	1/4"	1-1/4"	2"	4"
DeWALT ULTRACON®+	1/4"	1-1/4"	1"	4"

WOOD SCREW INSTALLATION NOTES:

1. *Maintain a minimum 5/8" edge distance, 1" end distance, & 1" o.c. spacing of wood screws to prevent the splitting of wood.*

Documents Prepared By:
Lyndon F. Schmidt
P.E. No. 43409
RW BUILDING CONSULTANTS, INC.
P.O. Box 230, Valrico, FL 33595
Phone No.: 813.659.9197
FBPE Registry No. 9813

PRODUCT: PLASTPRO INC. FIBERGLASS DOOR

PART OR ASSEMBLY: BILL OF MATERIALS & COMPONENTS

REVISIONS

NO.	DATE		BY
6	7/02/26	UPDATE TO 9TH ED. (2026) FBC	LFS
5	8/10/23	UPDATE TO 8TH ED. (2023) FBC	LFS
4	7/20/22	REVISE DOOR/SIDELITE PANELS	LFS

DATE: 10/08/14
SCALE: N.T.S.
DWG. BY: JK
CHK. BY: LFS
DRAWING NO.: FL-17347.16
SHEET 13 OF 13

© 2014 R.W. BUILDING CONSULTANTS INC.

G:\2023 FBC DRAWINGS 7-27-26\Plastpro\FL-17347 R7\FL-17347.15-16.dwg